BOMBAY

1882450
Tufted Chair

Parts and Hardware List

A.	Chair Back	1 pc
B.	Chair Seat	1 pc
C.	Legs	2 pcs
D.	Short Allen Head Bolts	3 pcs
E.	Medium Allen Head Bolts	4 pcs
F.	Long Allen Head Bolts	4 pcs
G.	Flat Washers	11 pcs
H.	Lock Washers	11 pcs
I.	Allen Head Wrench	1 pc

* Please make sure that you have all the parts and hardware indicated above before you begin assembly of this item.
* Use the hardware illustrations to determine the correct piece and size.
* This item should be assembled on a soft surface to prevent scratching of the finish during assembly.
* This item may require periodic tightening.

Hardware Illustrations

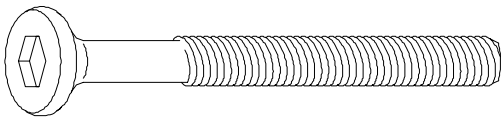

F. Long Allen Head Bolt

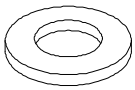

G. Flat Washer

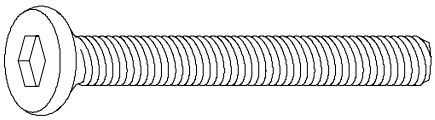

E. Medium Allen Head Bolt

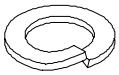

H. Lock Washer

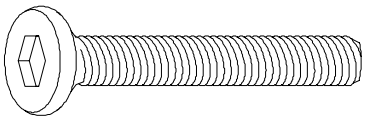

D. Short Allen Head Bolt

1882450
Tufted Chair

Assemble Chair

1. **Attach Chair Seat (B)** Place the Chair Back (A) on its back. Align the pre-drilled holes in the Chair Seat (B) with the pre-threaded holes in the Chair Back (A). Finger tighten the Short Allen Head Bolts (D), Lock Washers (H) and Flat Washers (G) into the pre-threaded holes in the Chair Back (A) as shown in the illustration #1. Insert the Long Allen Head Bolts (F), Lock Washers (H) and Flat Washers (G) through the pre-drilled holes in the corner blocks of the Chair Seat (B) and into the pre-threaded holes in the Chair Back (A). Tighten all bolts using the Allen Head Wrench (I).
2. **Attach Legs (C)** Align the pre-threaded holes in the Legs (C) with the pre-drilled holes in the front corner blocks of the Chair Seat (B). Secure in place with the Medium Allen Head Bolts (E), Lock Washers (H) and Flat Washers (G) using the Allen Head Wrench (I).

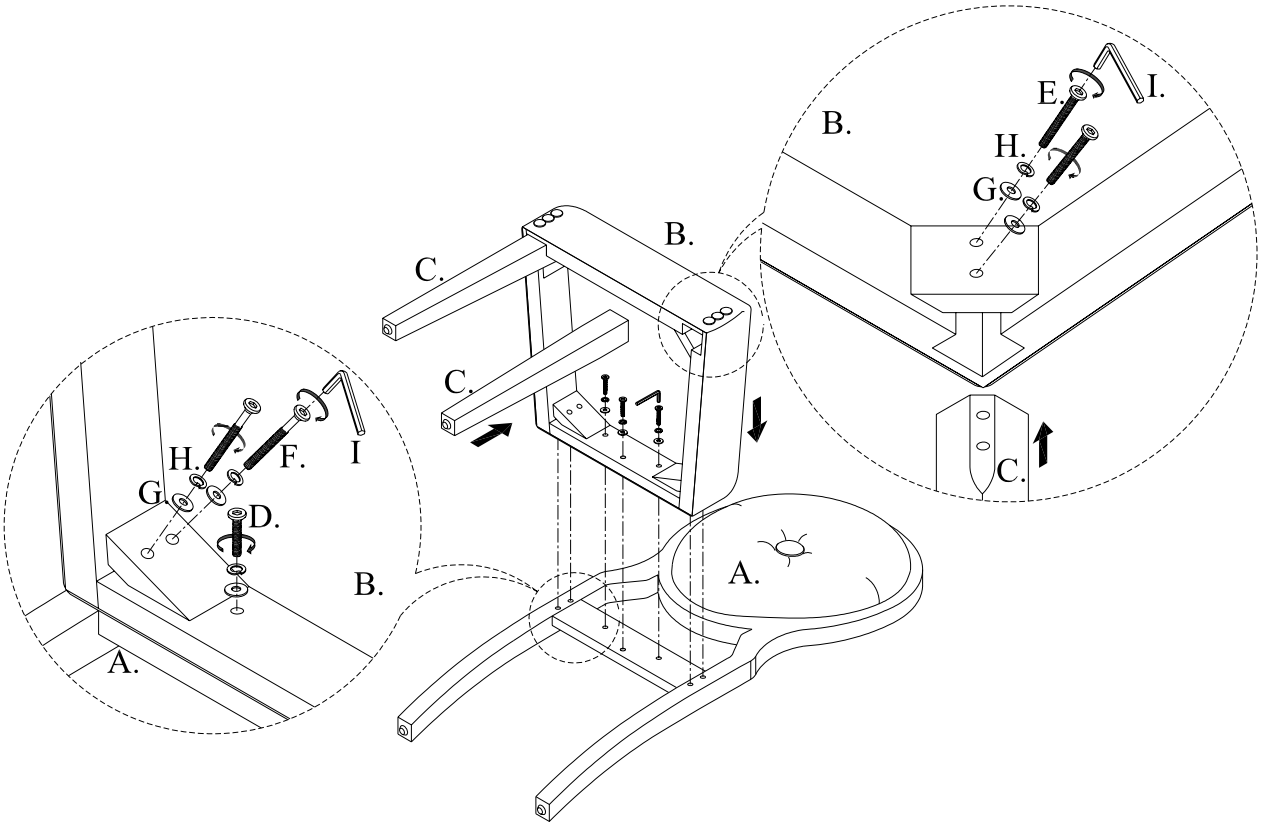

Illustration #1